Radial - Blade Turbine Gas Meter

TRZ Obligatory for verification
EQZ for internal measurement
EQZK for Sewer Gas

IOTAFLOW
SYSTEMS PVT. LTD

Technical Characteristics Radial-Blade Turbine Gas Meter

Primary

- Principle of velocity measurement
- For measurements requiring obligatory verification
- Sizes G 16 up to G 400
- Dimensions DN 50, 80 and 100
- Different G-sizes per nominal width:
  - DN 50: G 16 up to G 100
  - DN 80: G 65 up to G 250
  - DN 100: G 160 up to G 400
- Operating pressure max. 6 bar
- Meter element can be calibrated without monopipe fitting
- Pressure extraction connection inside the meter
- Counting device is in a gas-free space
- Low starting value
- High measurement stability and operational security due to high-quality, wear-resistant components; self-lubricating ball bearings
- Designed for simple servicing (measurement-cartridge principle)
- LF-pulse generator (standard)
- Standard integrated flow straine
- Short straight inlet lengths (2 × DN)
- Operation temperature range:
  - gas temperature -10°C up to +60°C
  - ambient temperature -20°C up to +70°C

Options

- Over-run brake: Mechanical over-run brake without measuring range for intermitting operation
- Pulse generator:
  - 2nd LF-IPG, can be retrofitted without breaking the verification seal
  - MF-IPG
  - HF-IPG
- Temperature sensor pockets in monopipe fitting

Mounting and maintenance

- Mounting /dismounting of the meter element possible without disconnecting the monopipe fitting
- The monopipe fitting remaining in the pipe network enables mounting /dismounting of the meter element without tension from the pipe network
- Can be installed in any position from horizontal to vertical (turbine axis not suspended and roller counter axis always horizontal)

Norms and approvals

- Developed and produced according to Quality Standard ISO 9001
- International and national type approvals

Technical data quanto monopipe TRZ/ EQZ/ EQZK

		Load Range		Pressure	Pulse Generators (Option)			
DN (MM)	Size	Q_{min} (m^3/h)	Q_{max} (m^3/h)	P_{max} (bar)	LF 1 pulse = m^3	2nd LF 1 pulse = m^3	MF 1 pulse = m^3	HF approx. F at Q_{max} (HZ)
40/50	Q 16	3	25	6	1	1	0.01	350
40/50	Q 25	4	40	6	1	1	0.01	550
40/50	Q 40	5	65	6	1	1	0.01	850
40/50	Q 65	6	100	6	1	1	0.01	1300
50	Q 100	10	160	6	1	1	0.01	1300
80	Q 65	10	100	6	1	1	0.01	200
80	Q 100	12	160	6	1	1	0.01	320
80	Q 160	15	250	6	1	1	0.01	500
80	Q 250	20	400	6	1	1	0.01	800
100	Q 100	13	160	6	1	1	0.01	280
100	Q 160	15	250	6	1	1	0.01	440
100	Q 250	20	400	6	1	1	0.01	380
100	Q 400	25	650	6	1	1	0.01	610

Over-run brake

Quanto monopipe without over-run brake

Quanto monopipe with over-run brake NLB

Pulse generators

Connection of LF-, MF- as well as HF-pulse generators

LF-pulse generator can be fitted by user without breaking the manufacturing seal

Error curve

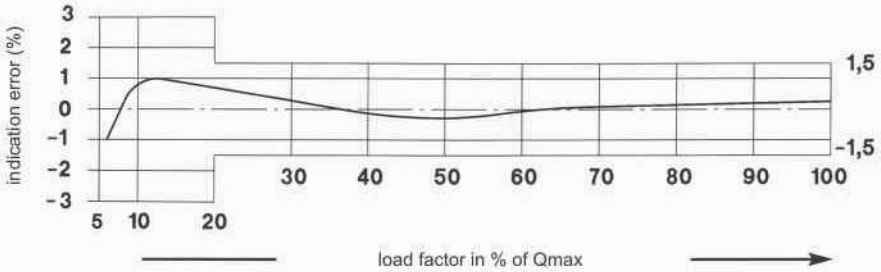

Pressure loss meter DN 40/50

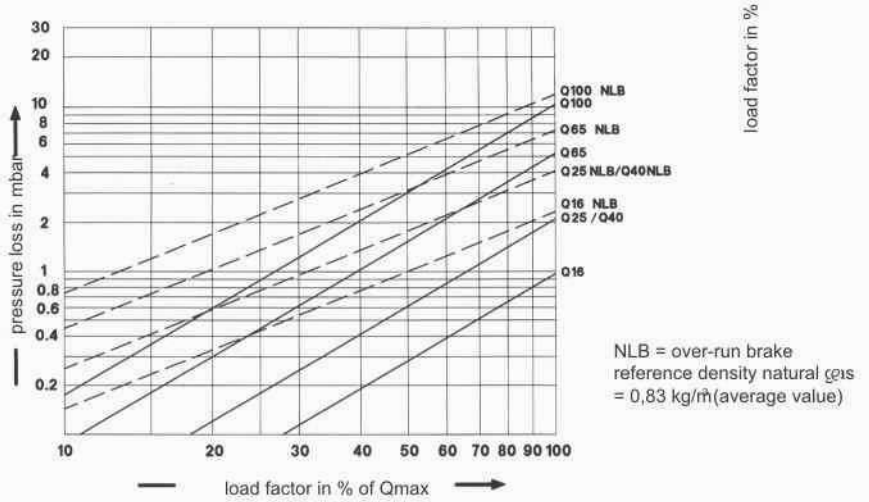

NLB = over-run brake
reference density natural gas
= 0,83 kg/m³(average value)

Pressure loss meter - EQZ 2 DN 80

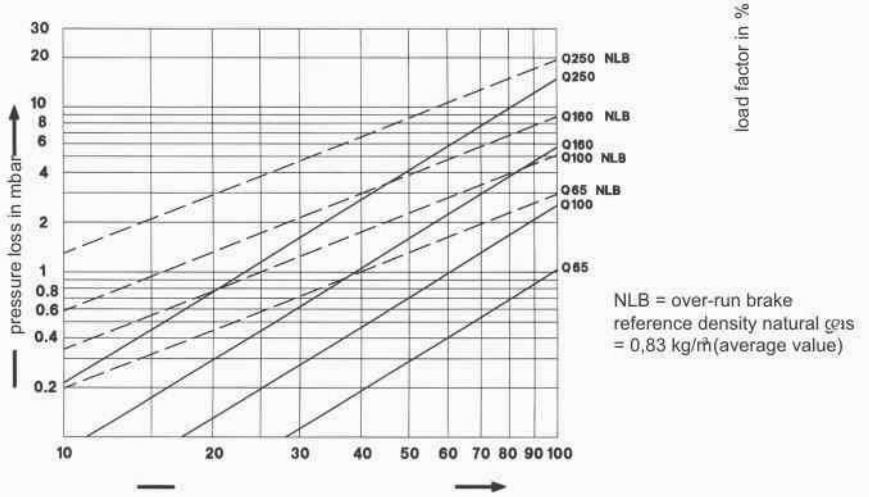

NLB = over-run brake
reference density natural gas
= 0,83 kg/m³(average value)

Pressure loss meter - EQZ 2 DN 100

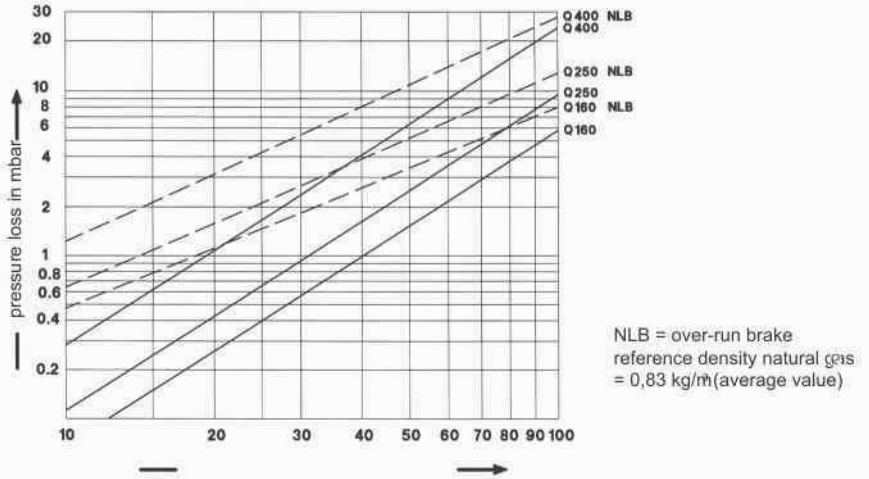

NLB = over-run brake
reference density natural gas
= 0,83 kg/m³(average value)

Application fields

lid cap:
➔ no gas flow!

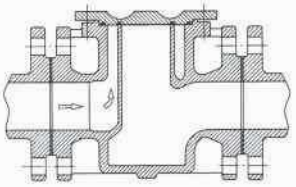

Prepared measuring point with overflow cap:
➔ gas is flowing!

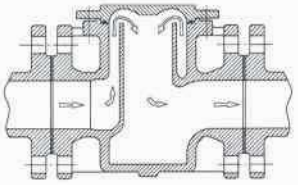

Operative measuring point with gas meter without over-run brake:

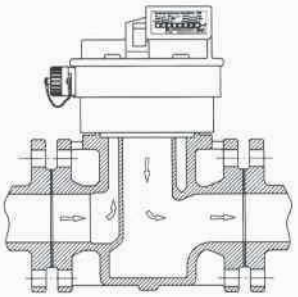

Operative measuring point with gas meter with over-run brake:

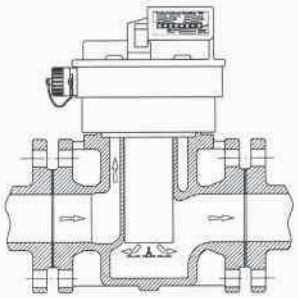

Gas volume correctors

ELCOR and ELCOR*plus*

Highlights

- High accuracy and stability of measurement
- Embedded modem 2G/3G/4G/NB
- Robust design
- Modular technology
- MID and ATEX approved
- Long battery life
- Designed for the future upgrades
- Tamper proof

...get the best from IOTAFLOW longtime experience

Introduction

The latest Iotaflow technology ELCOR *plus* and ELCOR represent powerfull solution applicable either like electronic volume corrector for billing purposes or like universal datalogger for station control and monitoring.

Both models are designed as compact devices integrating measuring metrological part together with communication unit and with telemetry features as well.

ELCOR*plus*

The most powerfull model is ELCOR*plus*. Its robust design together with tremendous modularity covers all known demands of gas segment over EVC (ELCOR*plus*) and datalogger installation (DATCOM*plus*).

Battery powered ELCOR*plus* converts gas volume under operating conditions to gas volume at base conditions, according to state equation. Information about primary volume can be received from all types of gasmeters through LF pulses (reed contact or wiegand sensor), HF pulses and absolute encoders (NAMUR, SCR+). The meter can be connected through mechanical index with Iotaflow relative encoder. EVC calculates the conversion factor C based on actual value of gas pressure, gas temperature and based on compressibility factor according to all known methods.

The basic concept enables to use device either as a single or dual channel EVC with possibility to add non-metrological channel. Modular architecture enables to create various configurations up to 6 pressure or temperature transducers, 12 digital inputs, 4 digital outputs, 6 analogue inputs and 4 analogue outputs, based on customer requirements.

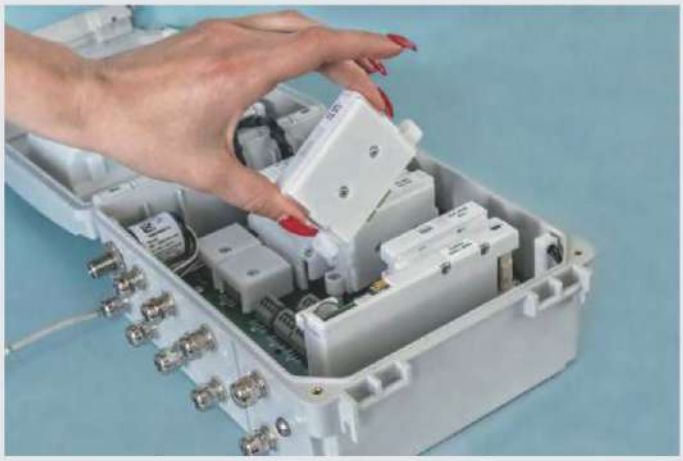

Any configuration can be individually customised by parameter file locally or remotely.

All data (instantaneous, archived data, diagnostics) can be visible on backlit graphical LCD display with using 6-buttons keypad. This keypad and LCD combination enables simple parameters setup as well.

All measured and calculated data can be optionally stored at 11 different archieves with sufficient memory capacity covering couple of years without overwriting of old records.

Generation 4 you

In addition to metrological measuring part ELCOR*plus* can handle two independent communication modems, internal and external. There are selectable modem modules for 2G, 3G, 4G and 4G NB. Modular design is suitable for easy replacement with future generation of modems without interruption of functioning. All versions even with internal modem are approved for installation in hazardous areas Ex Zone 0, 1, 2.

Lifetime of modem battery with regular calling once a day is guaranteed at least 6 years in defined mode of working. For more frequent communication (or permanent) the external power supply module (AC or solar) can be applied for powering EVC and modem separately.

Except modems there are paralelly usable two selectable serial interfaces RS232 and RS485 and local infrared interface.

The data can be transferred independently to data collection system (billing) or monitoring and control system (Scada). Various communication protocols are available. The protocol can be selected by enduser for each communication channel independently. The data transfer is equipped with access protection, encryption tools and system of certified firmware remote download.

ELCOR*plus* is designed in robust polycarbonate housing suitable for indoor or outdoor installation. This cabinet is fully resistant against external tampering and disturbances with massive locking lever.

ELCOR

ELCOR is simplified version of bigger ELCOR*plus*. The versatility is limited comparing the bigger model. It is designed as single channel EVC with only one RS485 (or RS232) serial port and with optional embedded modem both powered by batteries. ELCOR is suitable for standard projects where reliable and smart EVC is required.

Datalogger DATCOM and DATCOM*plus*

For telemetry projects where dataloggers are required DATCOM and DATCOM*plus* are available. They use identical HW and FW features as EVC series enhanced with functionality typical for dataloggers installations.

Advantages of open architecture together with flexible internal structure of IOTAFLOW dataloggers series bring unlimited solution for any project in gas segment.

Technical specifications

	ELCOR	ELCOR*plus*
Housing	**The housing was designed for use in outdoor with focus on robustness and resistance against tampering. It can be sealed and secured by a suitable lock. The housing is equipped with a closing mechanism keeping the lid closed tightly even without securing the lid by screws.**	
Material	Glass fiber polycarbonate	
Dimensions	210 x 190 x 93 mm	263 x 201 x 111 mm
Weight (depends on configuration)	1.5 kg	2.2 kg
Protection class (EN 60529)	IP 66, outdoor environment	
Working temperature	-25°C to +70°C (optionally from -40°C)	
Control panel	**The new ELCOR series brings even better capacitive keypad very well known from picoELCOR series.**	
	6 button capacitive keypad	
Display	**Local reading of all measured instantaneous and archived data.**	
Standard variant	Graphic backlit LCD 128 x 64	
Optional	Alphanumeric segment backlit LCD (working from -40 °C; always ON)	
Digital transducers	**The new generation of digital transducers offers traditional high stability and accuracy of IOTAFLOW pressure and temperature transducers.**	
	Up to 2 digital transducers	Up to 6 digital transducers
Pressure transducer type	EDT 96	
Standard MID approved ranges - absolute (accuracy 0.25% of measured value)	0.8 - 5.2; 2 - 10; 4 - 20; 7 - 35; 14 - 70; 25 - 130 bar	
Extended MID approved ranges - absolute (accuracy 0.25% of measured value)	0.8 - 10; 0.8 - 20; 4 - 70 bar	
Non MID ranges - absolute (accuracy 0.2% full scale)	0.8 - 35; 0.8 - 70; 0.8 - 130 bar	
Non MID ranges - gauge (accuracy 0.4% full scale - below 1 bar) (accuracy 0.2% full scale - above 1 bar)	0 - 0.2; 0 - 1; 0 - 1.6; 0 - 4; 0 - 6; 0 - 10; 0 - 25; 0 - 40; 0 - 70 bar	
Temperature transducer type	EDT 101	
Measuring range standard	-25°C to +70°C	
Measuring range extended	-40°C to +70°C	
Power supply	**The device is designed as battery power supplied (ELCOR) with an option of external power supply (ELCOR*plus*) either from solar pannel or from mains 120V/230V AC (using external modules placed in non-hazardous area).**	
EVC battery packs - battery life (in defined conditions)	B-03 (17Ah) lithium battery - up to 11 years	B-03 (17Ah) lithium battery - up to 11 years B-03D (30Ah) lithium battery - up to 18 years B-03A alkaline battery - up to 6 years
Modem battery packs - battery life (in defined conditions)	HB-03 (GSM/GPRS modem, lithium battery, 12Ah) - up to 6 years HB-03D (GSM/GPRS modem, lithium battery, 20Ah) - up to 11 years HB-04 (LTE modem, lithium battery, 12Ah) - up to 6 years	
External power supply	not available	PS-E external module (EVC) PS-M external module (MODEM)
Communication with the device	**Both models supports various communication interfaces allowing local or remote communication.**	
Serial communication interface	1x RS232 or RS485	2x RS232 or RS485
Optical communication interface	optical interface (EN 62056-21)	
Wireless communication (modem)	GSM/GPRS LTE Cat1 LTE M1 LTE-NB (preliminary)	

Technical specifications

		ELCOR	ELCOR*plus*
Inputs/Outputs		**The device provides digital inputs and outputs fully configurable by end user.**	
Digital inputs		3x (LF or binary)	up to 12x (LF, 2x HF, binary)
Digital outputs		2x (LF or binary)	4x (LF or binary)
Analog inputs (4-20mA)		not available	up to 6x (optional)
Analog outputs (4-20mA)		2x (using external module CLO)	up to 4x integrated (optional) up to 4x (using external module CLO)

Encoder interface	**Various encoders are supported**
Encoder types supported	NAMUR SCR+ IOTAFLOW

Extension internal modules		**ELCOR and ELCORplus series was developed as modular device enabling full customization.**	
Communication	**Modems**	M2G: 2G modem M4G: 2G/3G/4G - LTE Cat1 modem M4GM1: LTE M1 modem LTE-NB (preliminary)	
	Serial interface	integrated	S1-COM: RS232/RS485 serial interface
Gas meter encoder interface		S0-SCR: SCR+ encoder interface S0-NAM: NAMUR encoder interface	
Analog 4 - 20mA input/output	**Inputs**	not available	S1-2AI: 2x input
	Outputs	not available (externally via CLO module)	S1-2AO: 2x output
External power supply	**EVC**	not available	S3-PWR1
	Modem		S4-PWR2
Multipurpose extension board		not available	S0-EXT1: 2x HF NAMUR input 6x LF/Binary digital input 2x Analog input (4 - 20 mA) 2x Digital transducer EDT

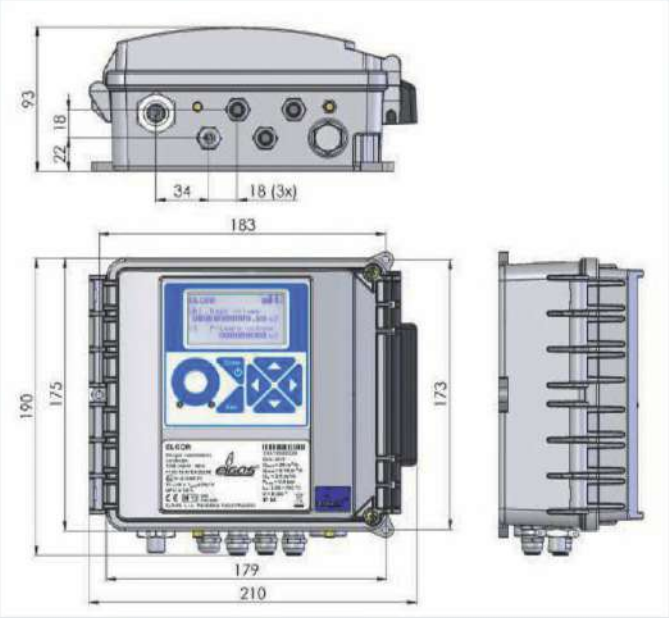

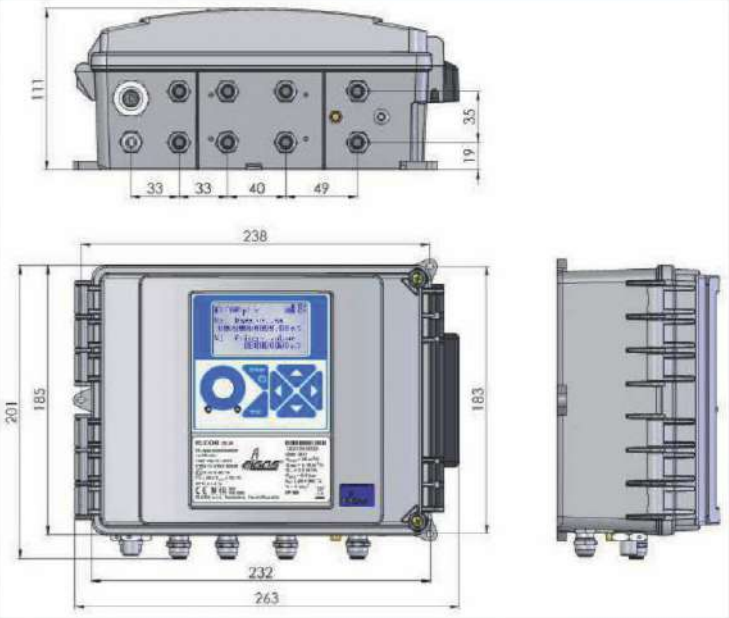

Radial - Blade Turbine Gas Meter

TRZ Obligatory for verification
EQZ for internal measurement
EQZK for Sewer Gas

IOTAFLOW
SYSTEMS PVT. LTD

Contact Us
IOTAFLOW SYSTEMS PVT. LTD.

C-2/13, Mayapuri Industrial Area Phase-II,
New Delhi - 110064 (INDIA)

+91-9910693866/ +91-7982674054

contact@iotaflow.com

Specifications subject to change without prior notice. © Iotaflow Systems Pvt. Ltd.

www.iotaflow.com

Cat no. 123.01.0924